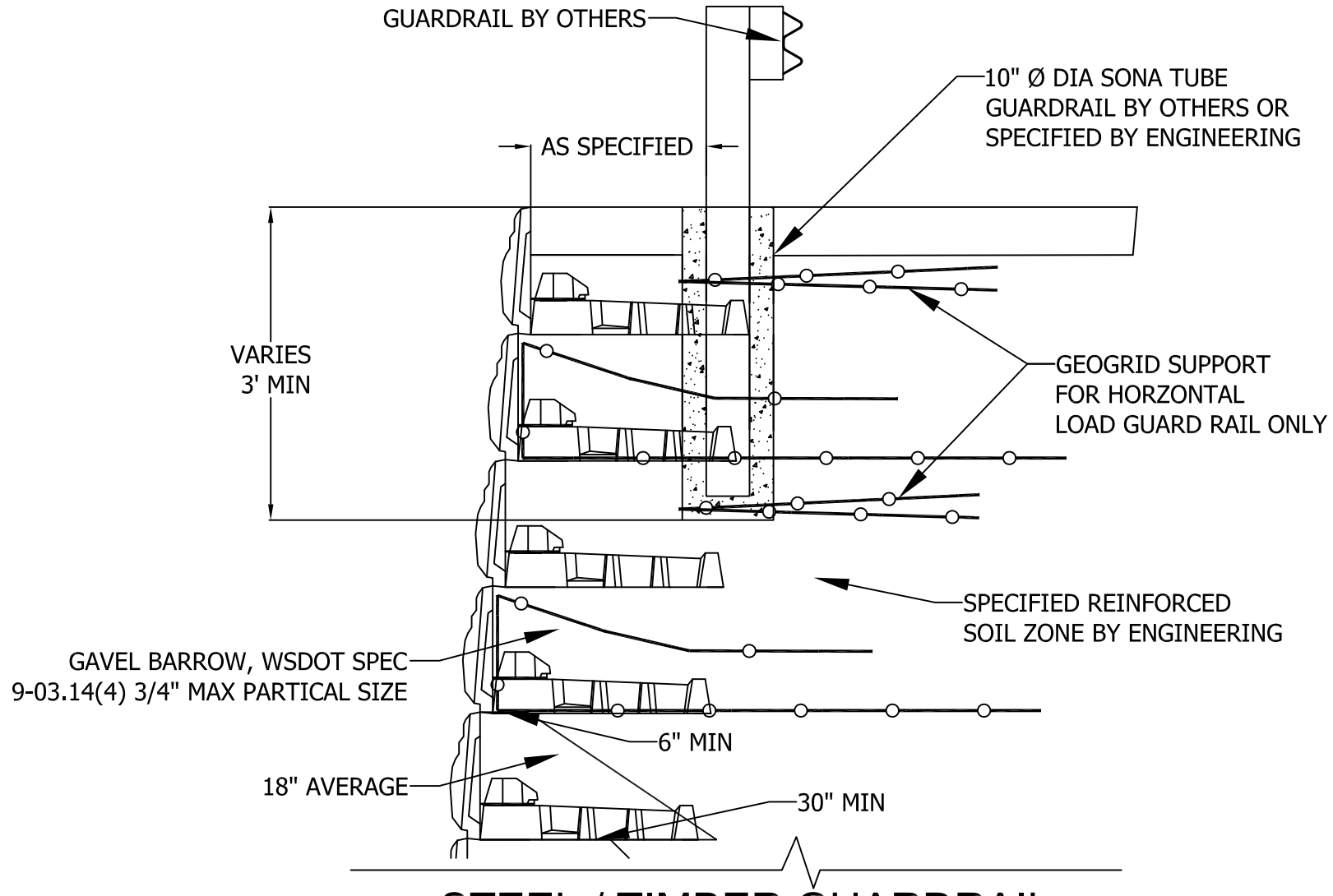

STEEL / TIMBER GUARDRAIL

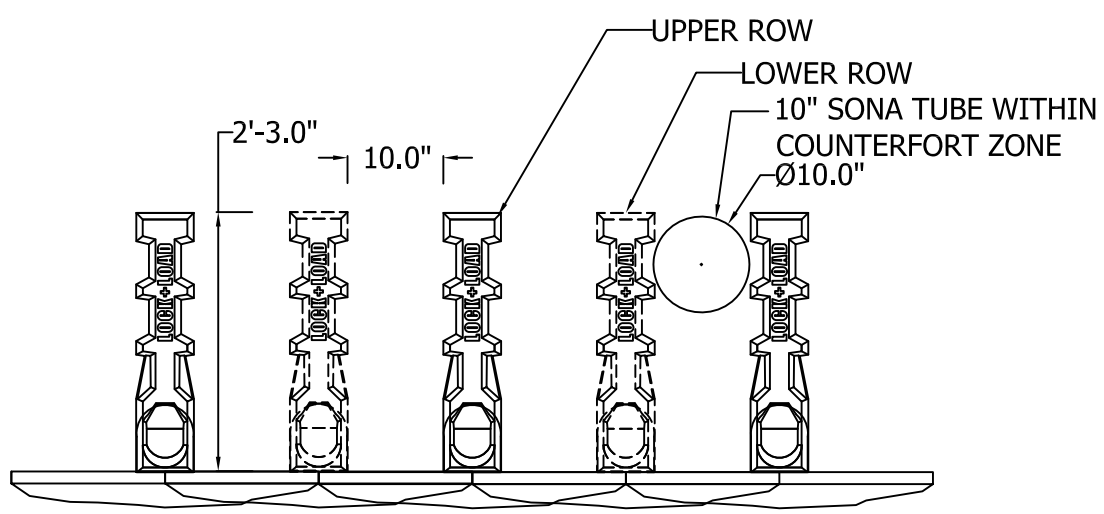

PLAN VIEW DETAIL (2 ROWS SHOWN)

REV #	DESCRIPTION	DATE

LOCK+LOAD™
RETAINING WALL SYSTEMS
1681 CHESTNUT STREET, SUITE 400, VANCOUVER, B.C. V6J 4M6
Tel:(604) 732-9990 Toll Free: 1-877-901-9998 Fax: (604) 737-1140
Web site: www.lock-load.com

DRAWING NAME	GUARD RAIL DETAIL
PROJECT NAME	TYPICAL DETAILS
LOCATION	
CITY	COUNTRY
DRAWN BY KJA	DATE 01/06/12
APPROVED BY RC/DA	PREPARED FOR
SCALE N.T.S.	
OUR PROJECT NUMBER CUSTOMER DRAWING	OUR DRAWING NUMBER LL-WSDOT-5A-GUARD RAIL